SCALE 1/72

KIT NO. 577

the LINDBERG line®
ESTABLISHED SINCE 1933

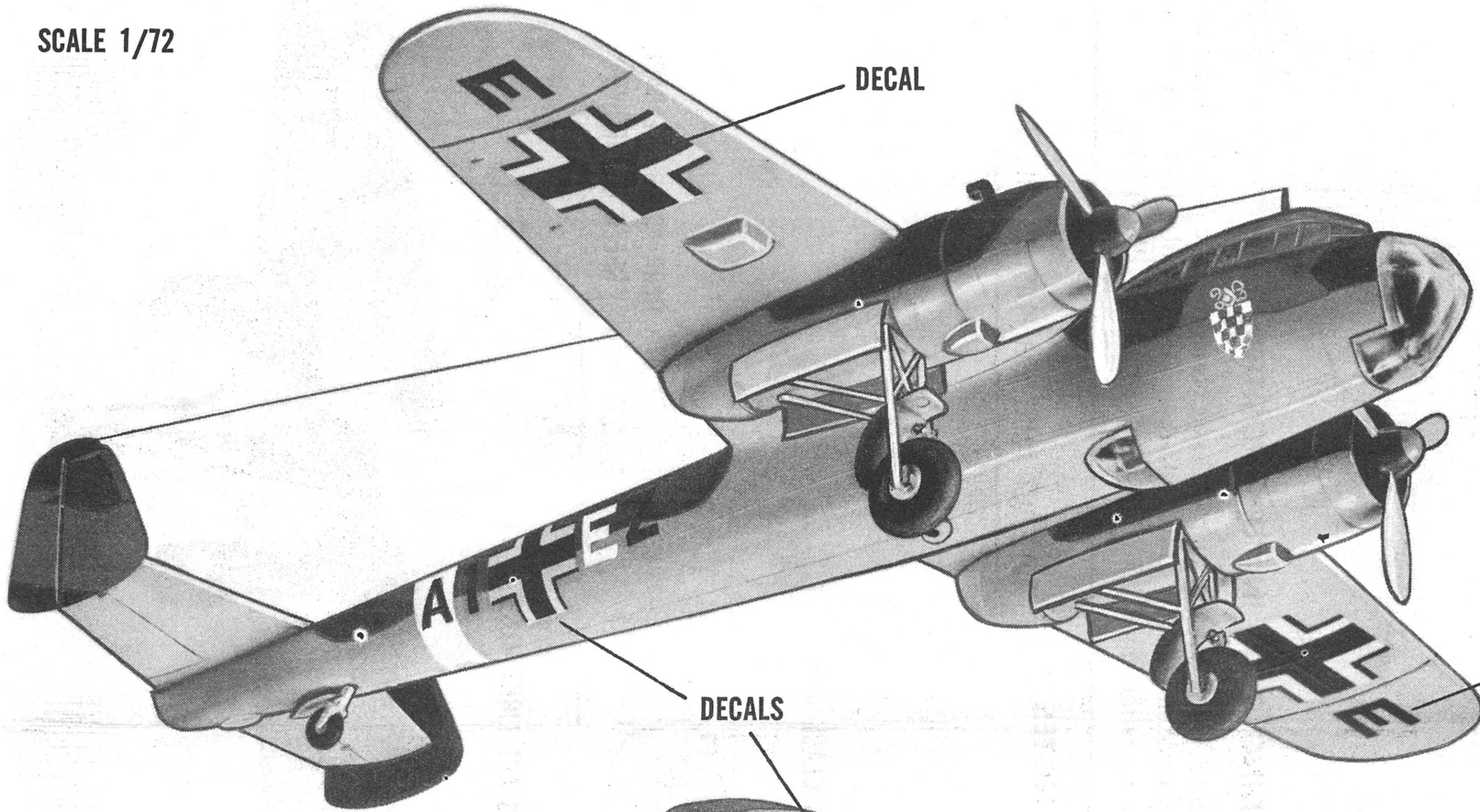

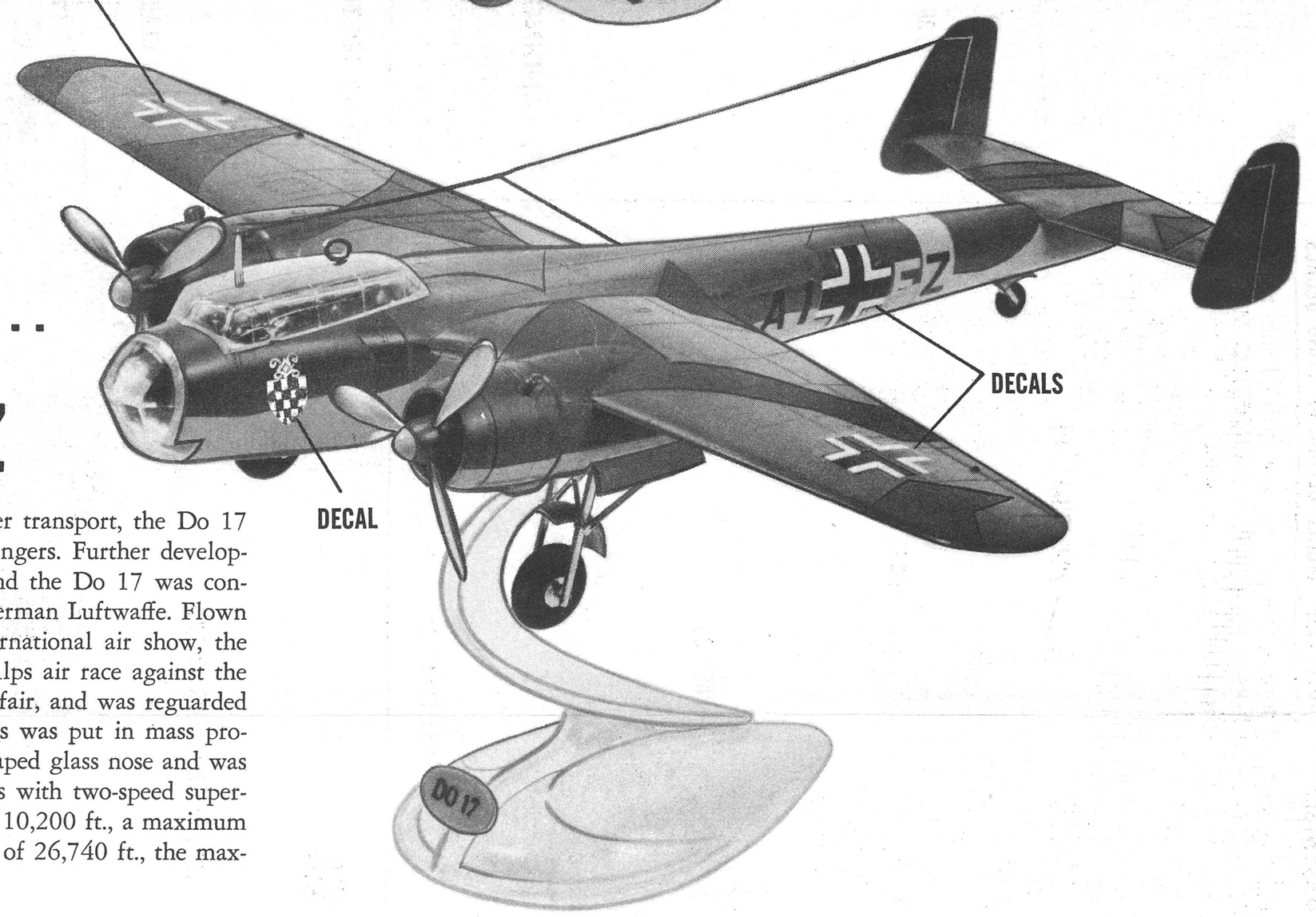

ASSEMBLY PLANS FOR THE . .

Dornier Do 17z

Designed originally as a high speed-mail and passenger transport, the Do 17 was considered improper for the job of handling passengers. Further development of the Do 17 for military use was carried on and the Do 17 was converted into a high speed twin engine bomber for the German Luftwaffe. Flown publicly for the first time in 1937 at the Zurich international air show, the Do 17 distinguished itself by winning the round-the-Alps air race against the best fighter planes of every country represented at the fair, and was reguarded as the fastest bomber in the world. The Do 17Z series was put in mass production in 1939 and had a newly designed diamond-shaped glass nose and was powered by two air-cooled radial Bramo 323A engines with two-speed superchargers having 900 h.p. for take-off and 1,000 h.p. at 10,200 ft., a maximum speed of 263 m.p.h. at 16,400 ft., and a service ceiling of 26,740 ft., the maximum bomb load was 2,200 lbs.

LINDBERG PRODUCTS, INC. SKOKIE, ILLINOIS PRINTED IN U.S.A.

EASY TO ASSEMBLE STEP BY STEP INSTRUCTIONS

1

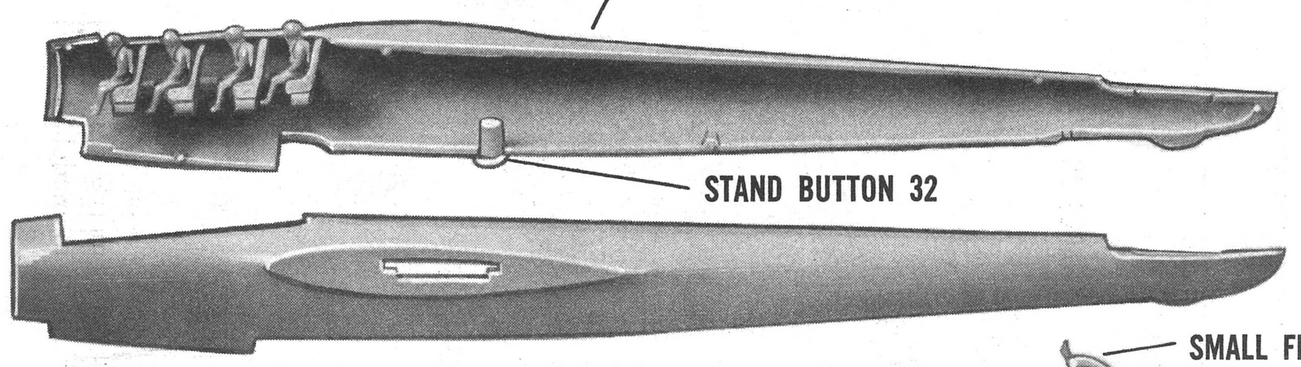

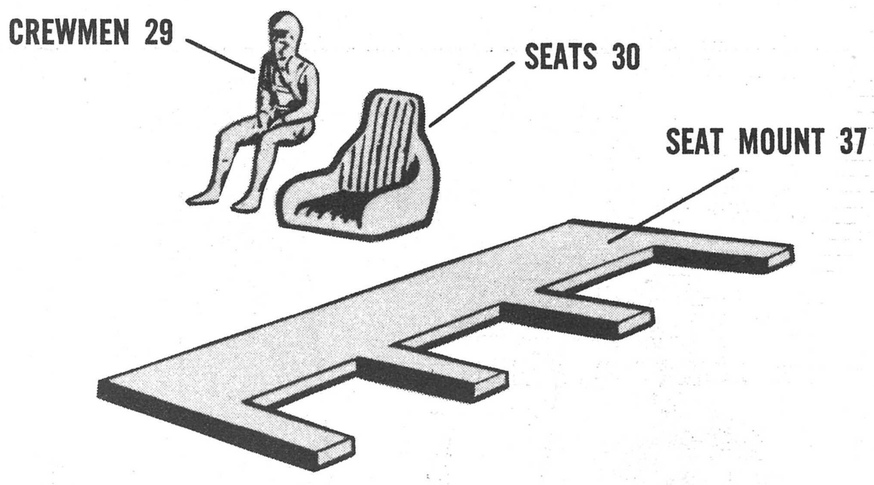

1. PILOT AND SEAT ASSEMBLY

Cement crewmen 29 to seats 30, then cement seats onto seat mount 37 and cement this assembly into body half 1. Next, cement small fender 24 to tail wheel 26, then cement tail wheel and stand button 32 to body half 1.

2

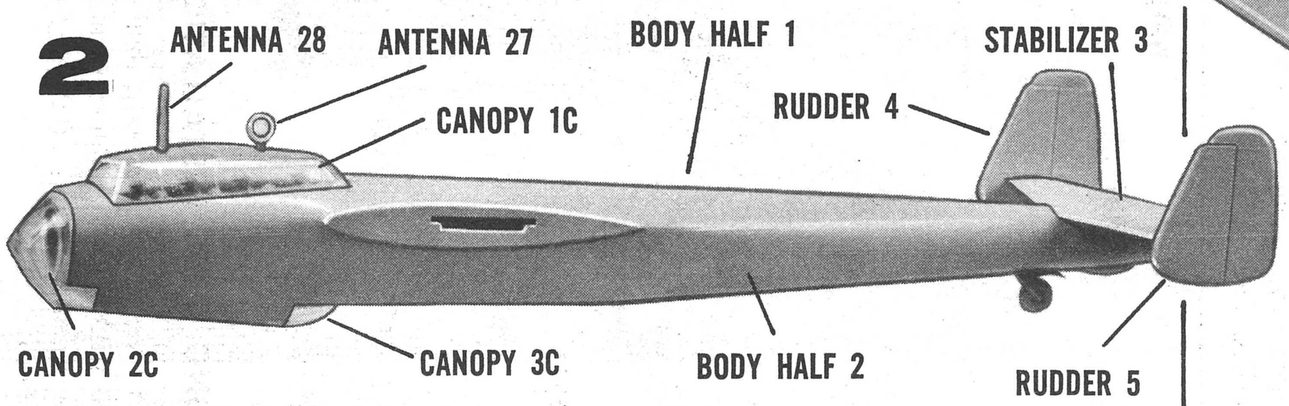

2. STABILIZER AND RUDDER ASSEMBLY

Cement body halves 1 and 2 together, then cement stabilizer 3 to body and cement rudders 4 and 5 to part 3. Now cement canopies 1C-2C-3C in place, then cement antennas 27 and 28 to canopy.

3

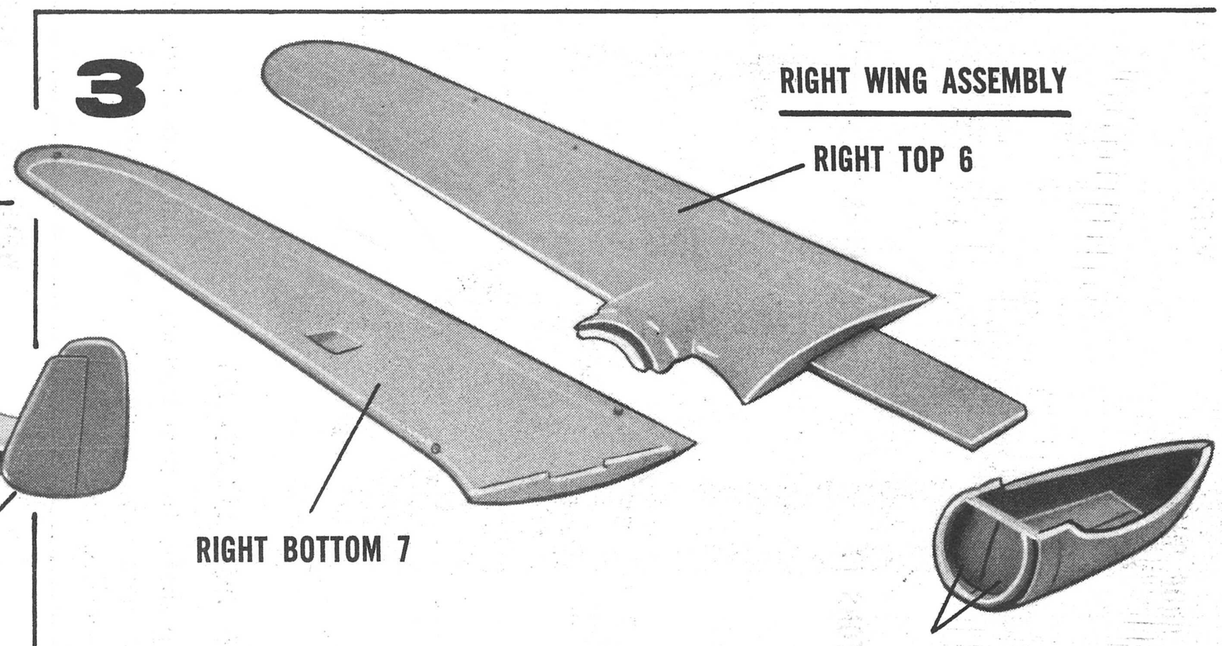

3. WING ASSEMBLY

Cement wing halves 6-7 and 10-11 together, then cement nacelle halves 8-9 and 12-13 together. Now cement nacelles to bottom of wings, (SEE PHOTO).

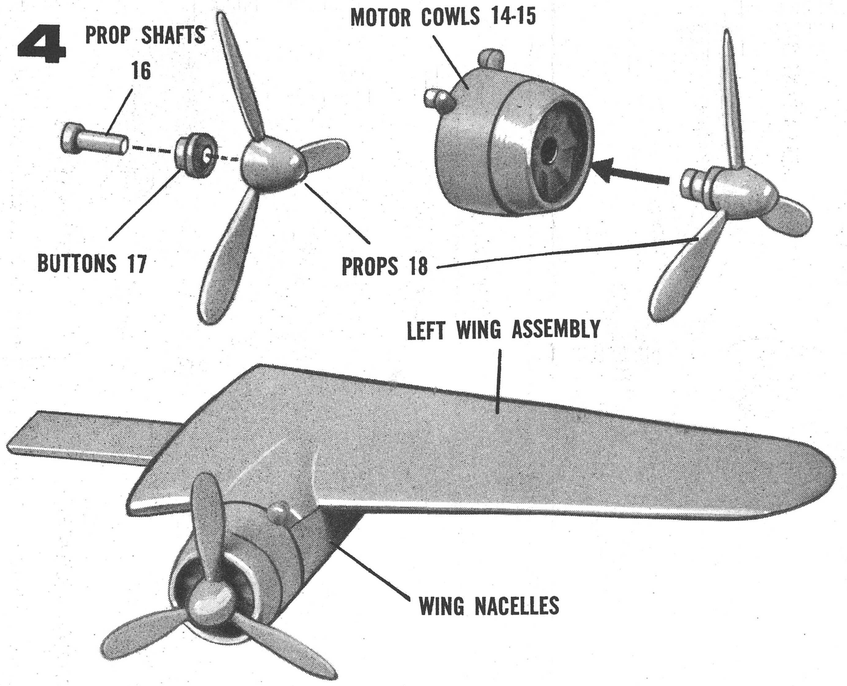

4. PROP INSTALLATION

Slide prop shafts 16 thru buttons 17 and press shafts into props 18. Next, press or cement prop assemblies into motor cowls 14-15, then cement cowls to wing nacelles, (SEE PHOTO).

6. STAND ASSEMBLY

NOTE: PAINT MODEL BEFORE APPLYING DECALS

Cement stand parts 38-39-40-31 together, then press wire shaft 41 into top of stand. Now apply decals to model—SEE PICTURES OF FINISHED MODEL FOR DECAL LOCATIONS, then place model onto stand wire.

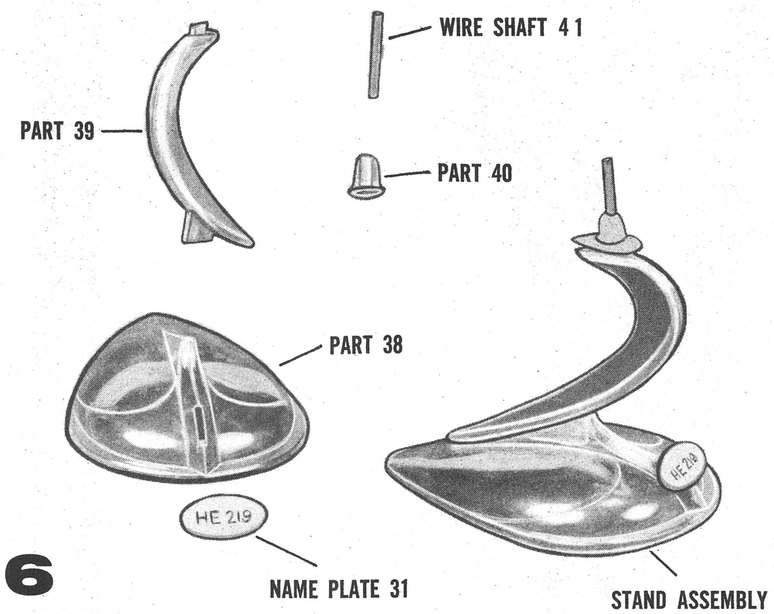

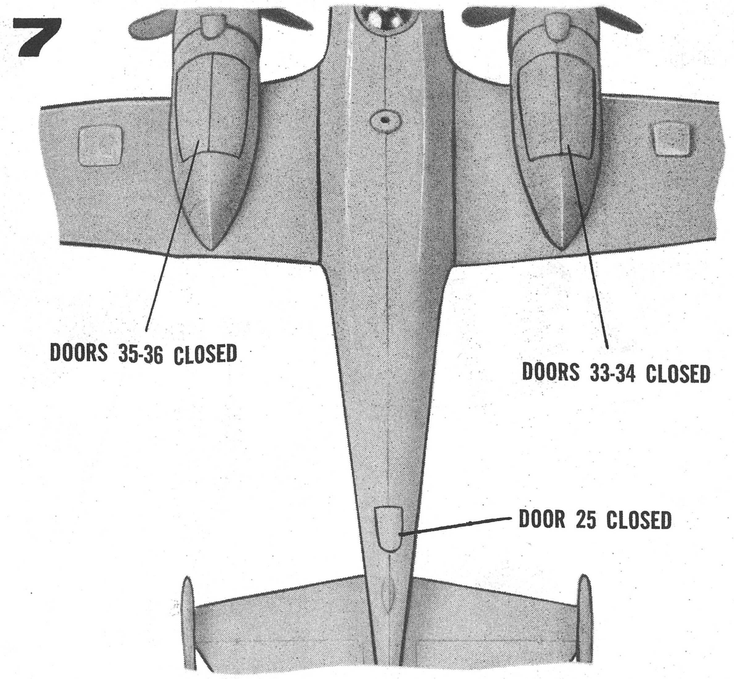

7. LANDING GEAR IN "UP" POSITION

To build model with landing gear in closed position, leave tail wheel and main landing gear assemblies off of model, then cement tail wheel door 25 and main gear doors into model in closed position, (SEE PHOTO).

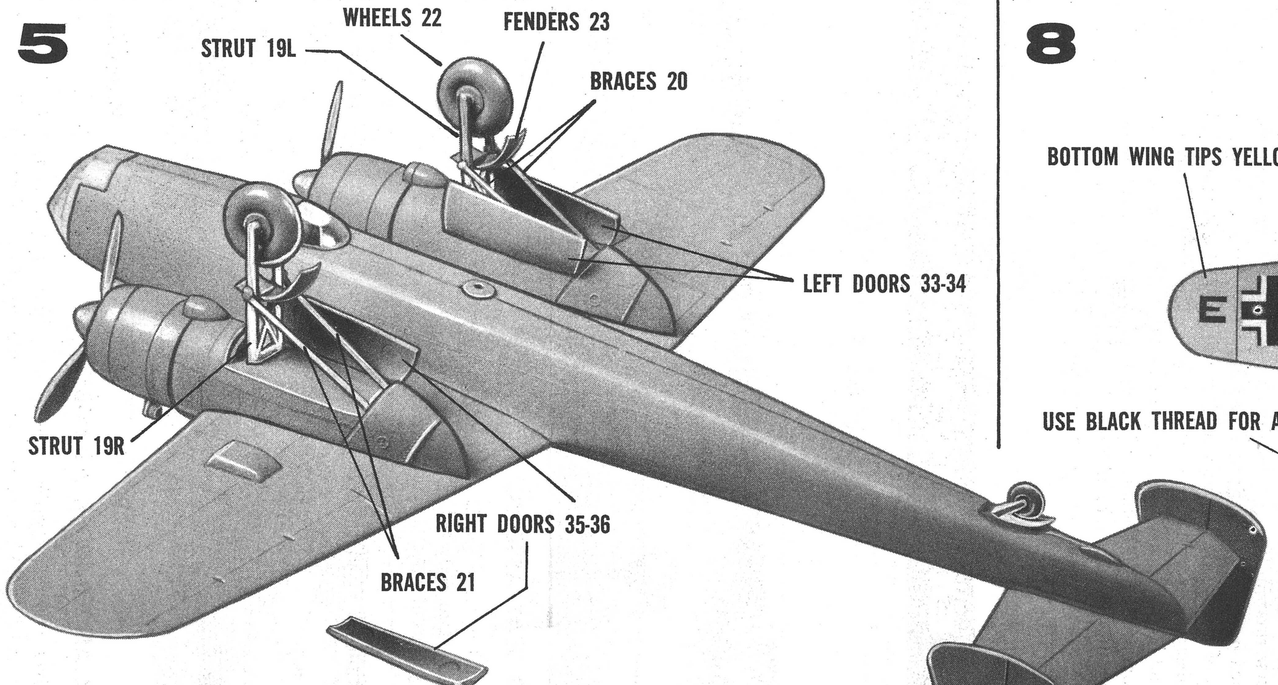

5. LANDING GEAR INSTALLATION

Cement and press wings into body, then cement fenders 23 and wheels 22 to landing gear struts 19R-19L. Next, turn model over and cement landing gears in place, then cement braces 20-21 and doors 33-34 and 35-36 to model as shown in photo.

8. PAINTING NOTES

NOTE: USE PAINT FOR PLASTICS ONLY

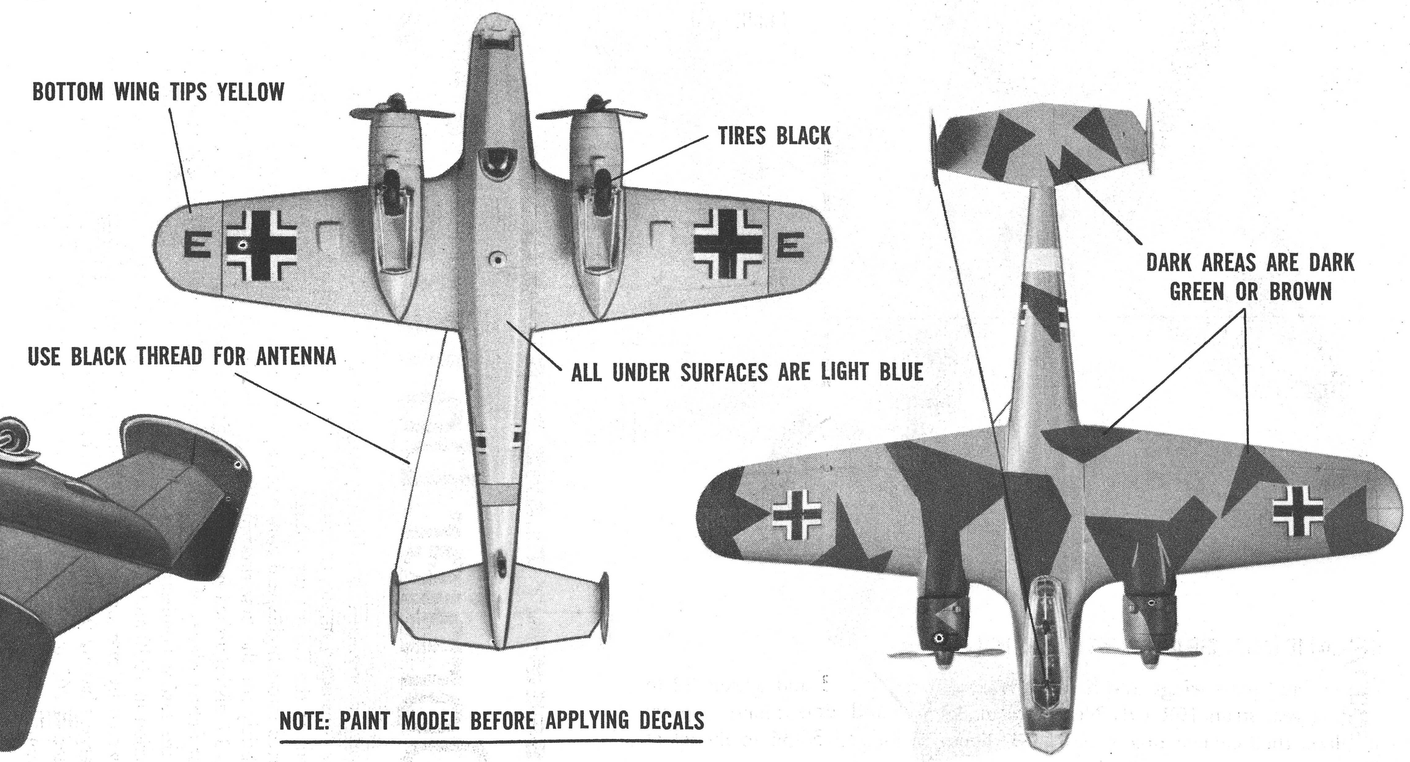

NOTE: PAINT MODEL BEFORE APPLYING DECALS