HMS SHEFFIELD

17 011

1/700 scale detail set for Revell kit

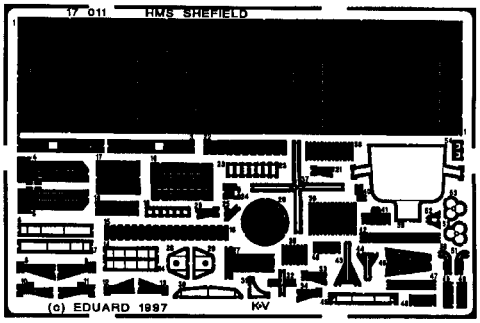

OPPOSITE SIDE
REMOVE
REPLACE
GRIND

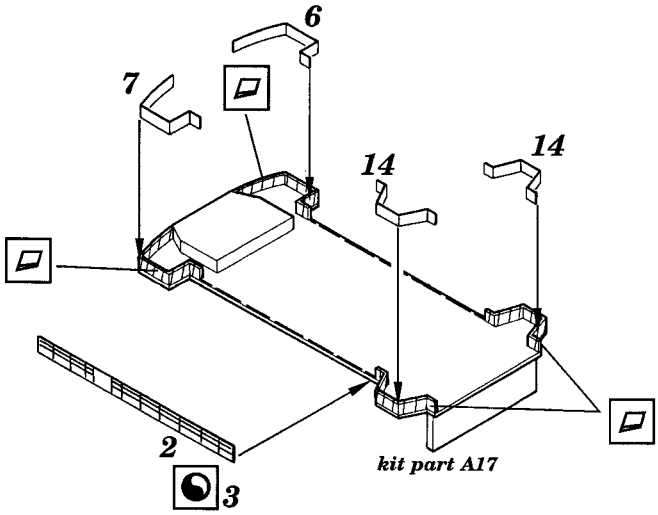

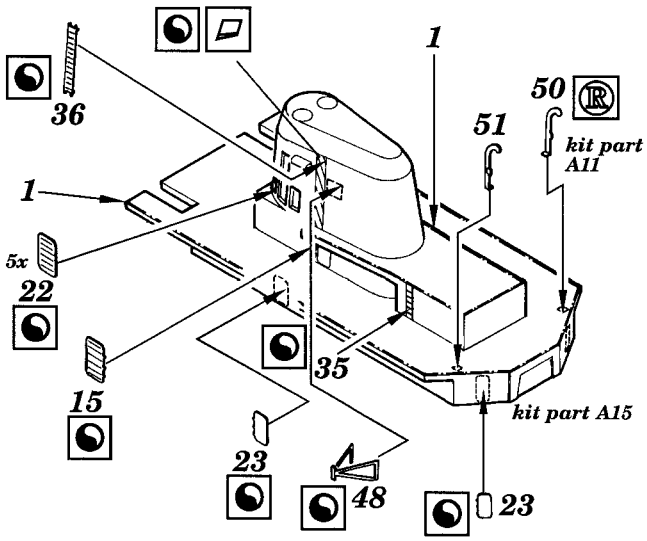

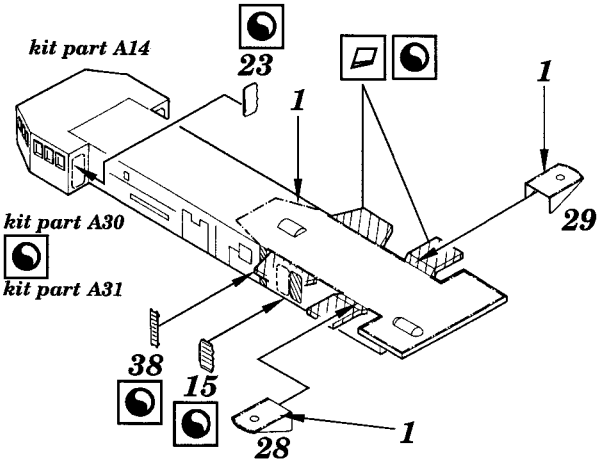

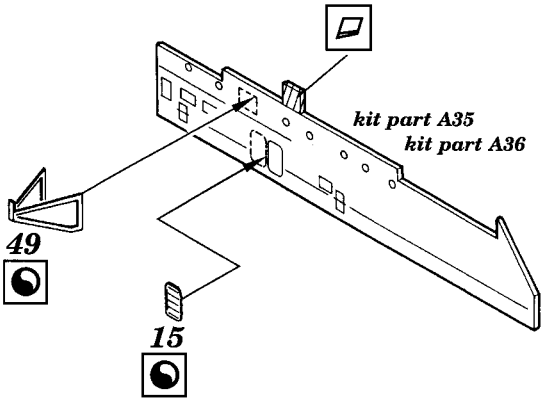

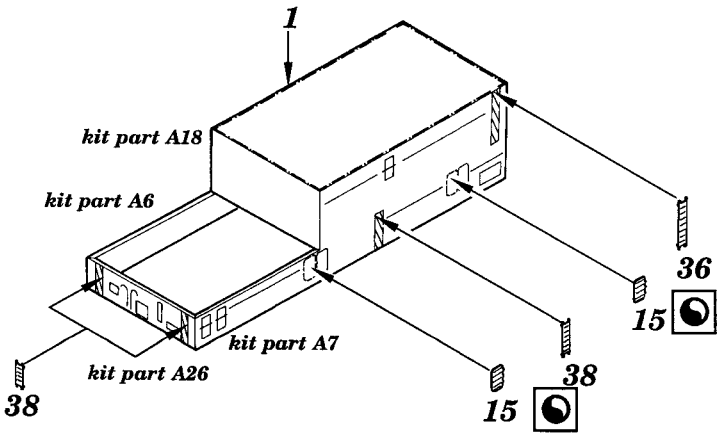

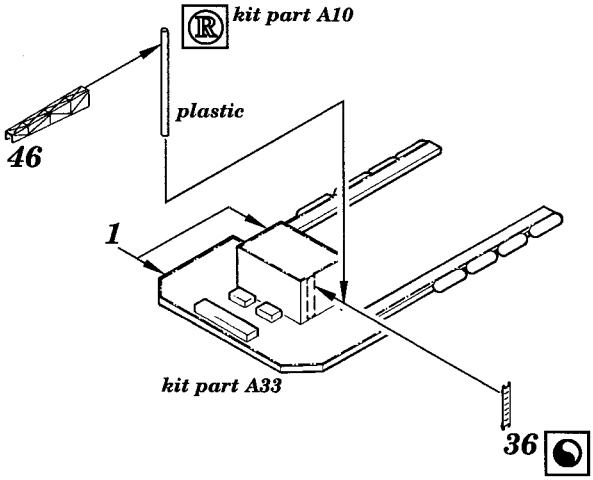

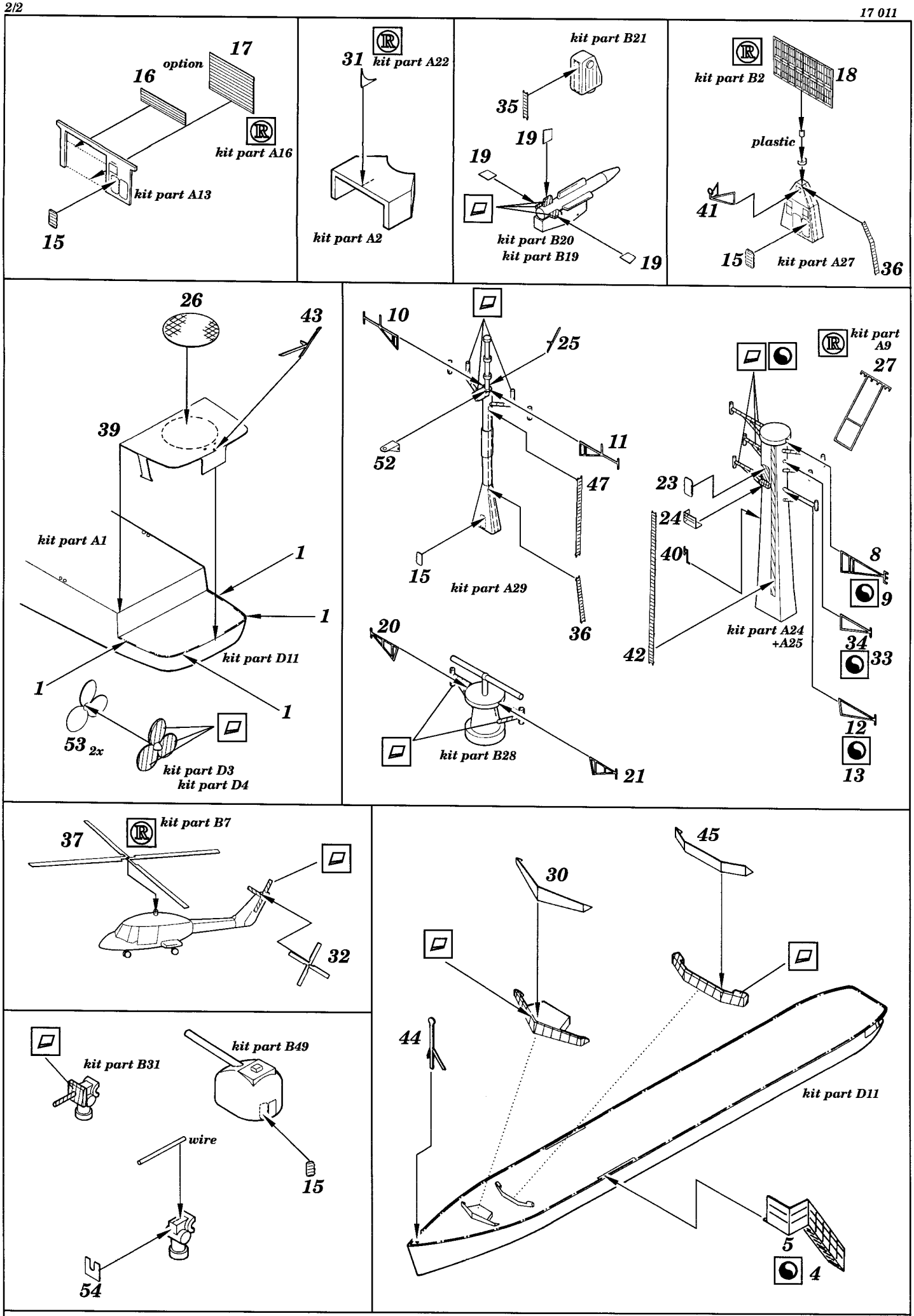

(c) EDUARD 1997

Made in Czech Republic