SW 72139

1/72 scale

FJ-3 Fury

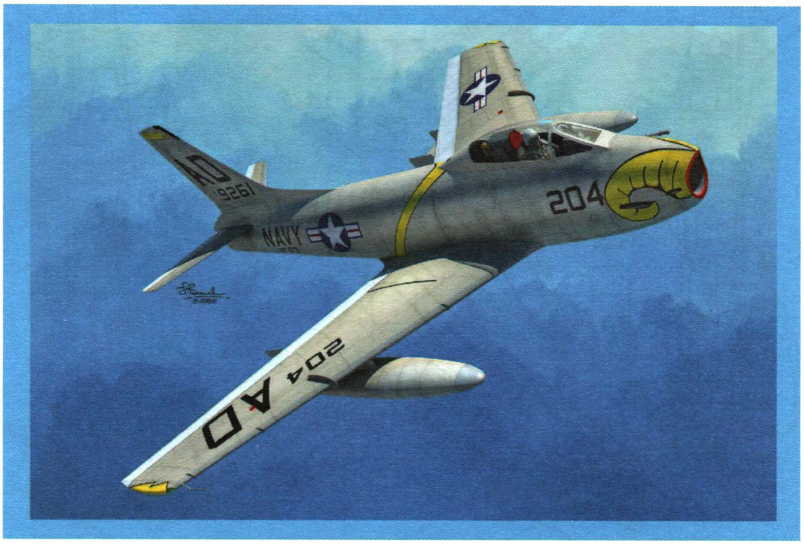

The North American FJ-2 and FJ-3 Fury were carrier versions of the F86 Sabre. 300 FJ-2 were ordered, reduced to 200 as an improved version,

FJ-3, was already being developed. XFJ-2B, the number 3 prototype, first flew 27 December, 1951. It had 4 x 20mm cannon as opposed to the F86's 6 machine-guns, but no other adaptations. The second and third aircraft to fly had modifications for carrier ops: widened main gear track, outer wing panels that folded upwards, an extended nose gear strut, arrestor-hook, tail skid, attachments for catapult launch, and an altered windscreen to give the pilot an improved view for approach and landing. The FJ-2 also had an all-moving tail-plane without dihedral. The powerplant was a marine version (J47-GE-2) of the F86F's J47-GE-27. The Navy prefered the lighter F9F Cougar, and ongoing breakages and handling problems made the FJ-2 unsuitable for carrier operations. The 200 FJ-2 went to the United States Marine Corps. They attempted to resolve handling problems but the FJ-2 was never really satisfactory.

The aircraft was further upgraded very early on with a Wright J65 powerplant, becoming the FJ-3. That aircraft first flew 3 July 1953. The only visible difference between the FJ-2 and the FJ-3 was the depth of the intake on the FJ-3. In 1955, wings from the F86F were fitted. This enhanced handling, but increased the landing speed. The Fury had camber added to the underside of the wing to improve low speed handling. Later aircraft had 4 underwing stations for external loads; 1000lb on the inboard, 500lb on the outboard. Deliveries were from Sept 1954, and the FJ-3 joined the fleet in 1955. 538 FJ-3s built. 194 were modified (FJ-3M) to carry sidewinder missiles, some later to control Regulus missiles (KDU-1), and some to control 6K cougar target drones. In 1956, aircaft were retro-fitted with probe and drogue refuelling equipment, the long probe fitted under the port wing.

SWORDMODELS s.r.o. Těšínská 288
739 34 Šenov
CZECH REPUBLIC

www.swordmodels.cz
e-mail: swordmodels@gmail.com

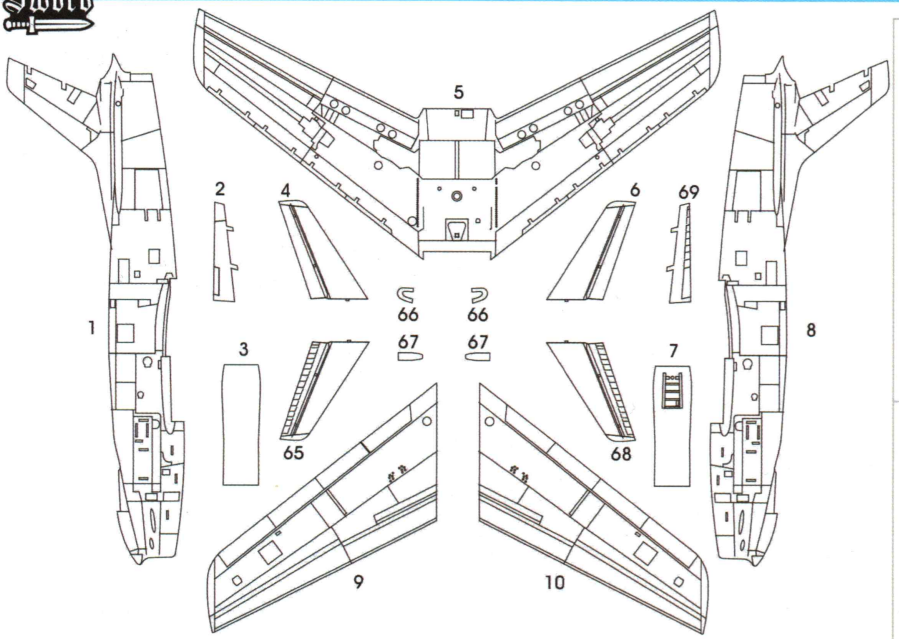

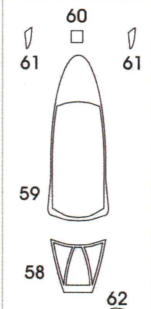

čiré díly/
clear parts

PUR díly/
PUR parts

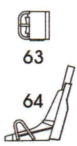

Lepit kyanoakrylátovým lepidlem/
instant cyanoacrylate glue

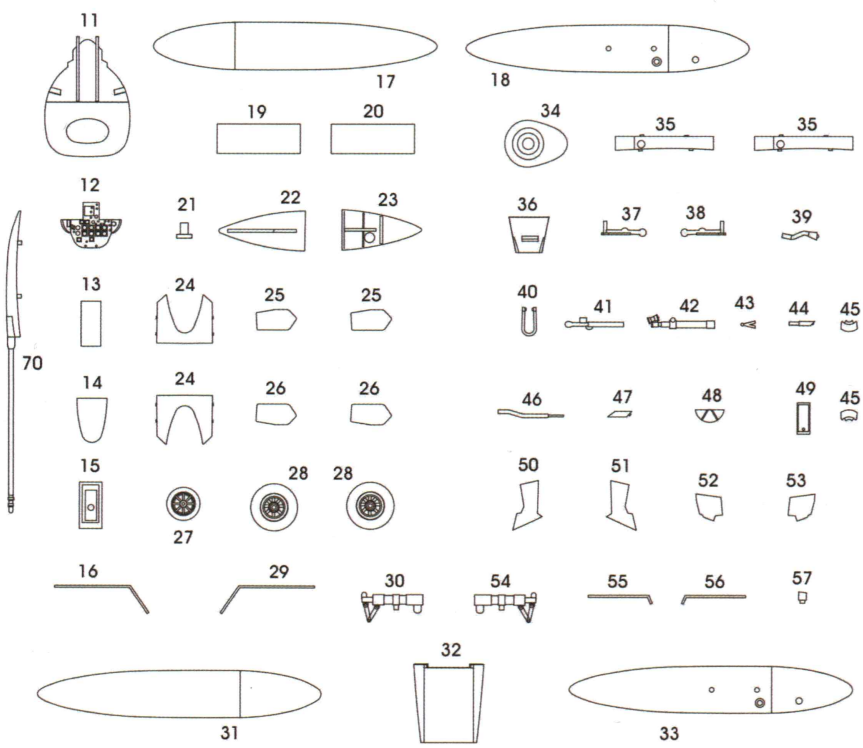

barvy/ colours

A	černá	Black
B	světle šedá	Light Gray
C	stříbrná	Silver
D	bílá	White
E	červená	Red
F	khaki	Khaki
G	šedočerná	Tyre Black
H	hnědá	Brown
I	kovová tmavá	Gun Metal
J	žlutá	Yellow

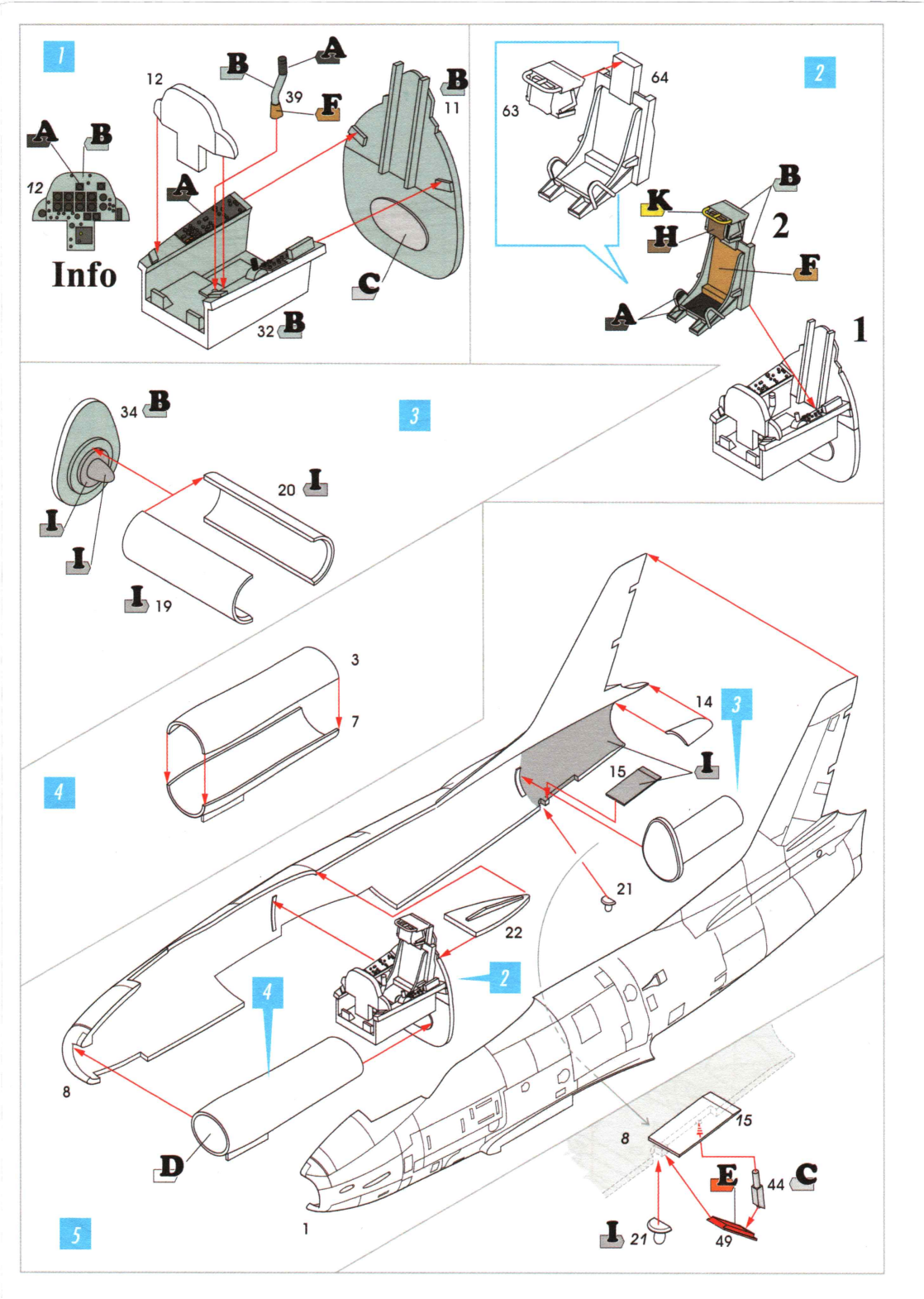
1
A
B
12
B
A
39
F
B
11
A
B
12
Info
A
32
B
C
2
64
63
B
K
H
2
F
A
1
3
34
B
I
20
I
I
I
19
4
3
7
14
3
I
15
21
22
2
4
8
D
1
5
8
15
E
44
C
I
21
49

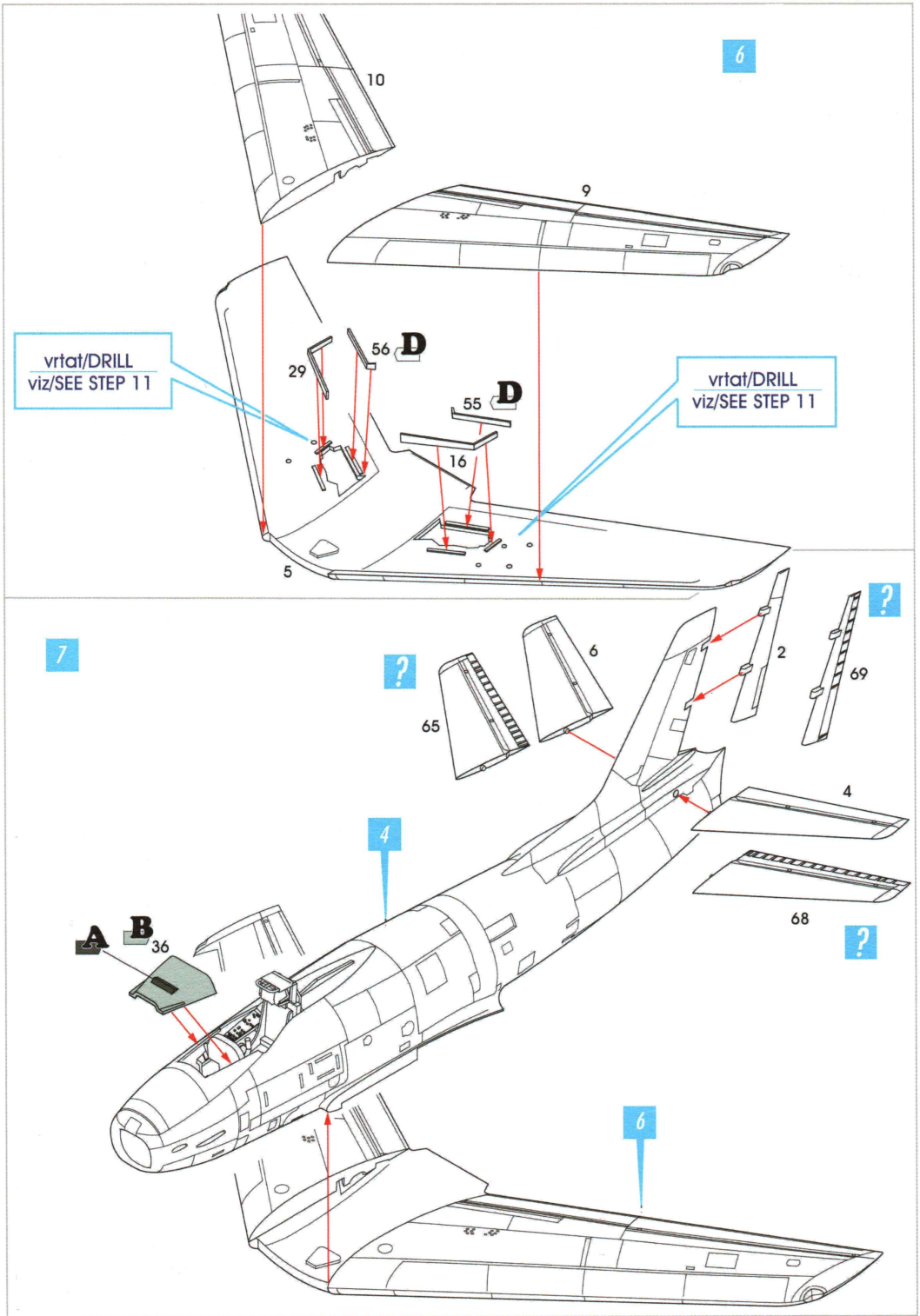
6
10
9
vrtat/DRILL
viz/SEE STEP 11
29
56
D
55
D
16
vrtat/DRILL
viz/SEE STEP 11
5
7
?
6
2
?
69
65
4
4
68
?
A
B
36
6

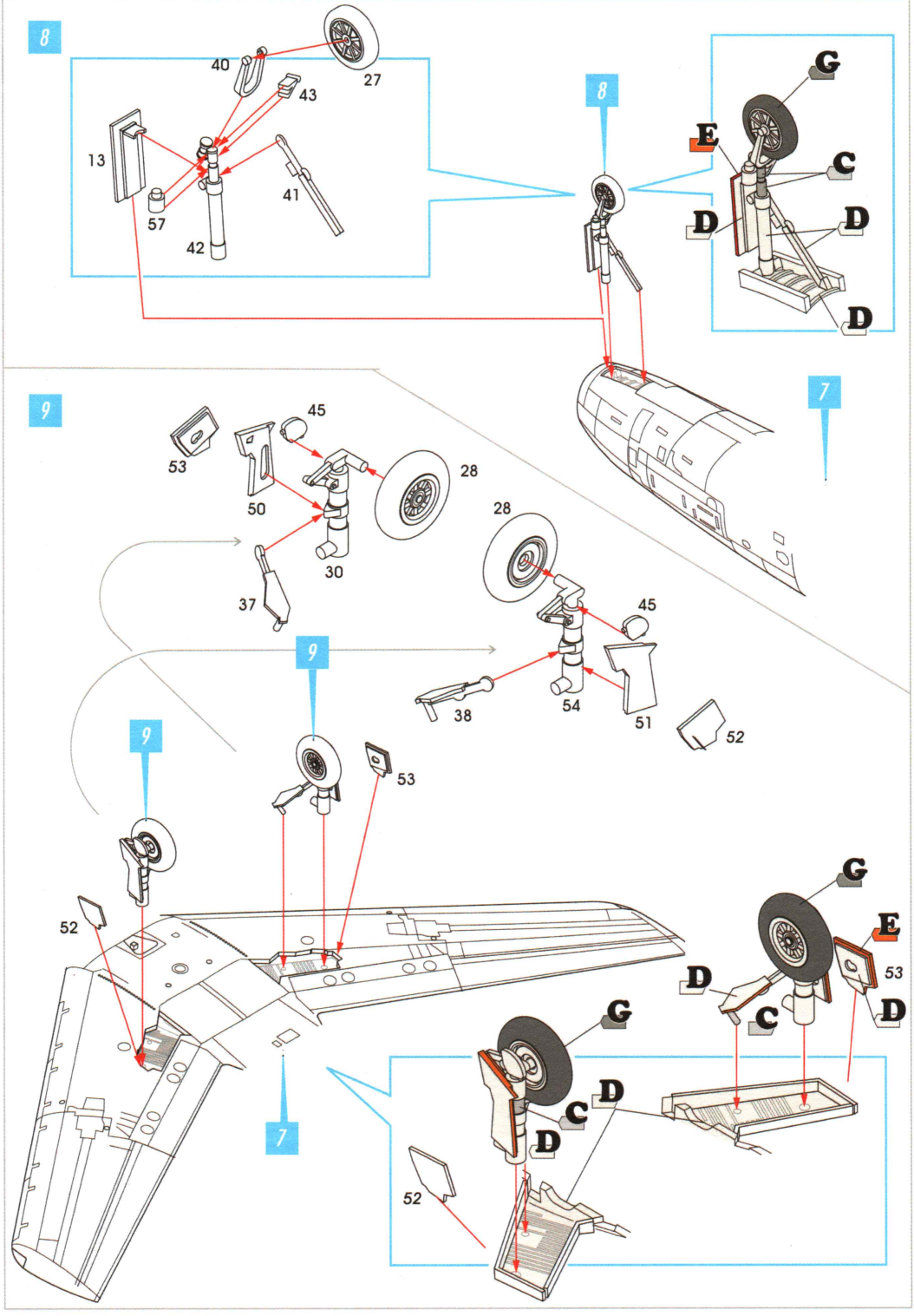
8
40
27
43
13
41
57
42
8
G
E
C
D
D
D
7
9
45
53
50
28
30
37
28
45
38
54
51
52
9
9
53
52
7
G
E
D
C
53
D
G
D
C
D
52

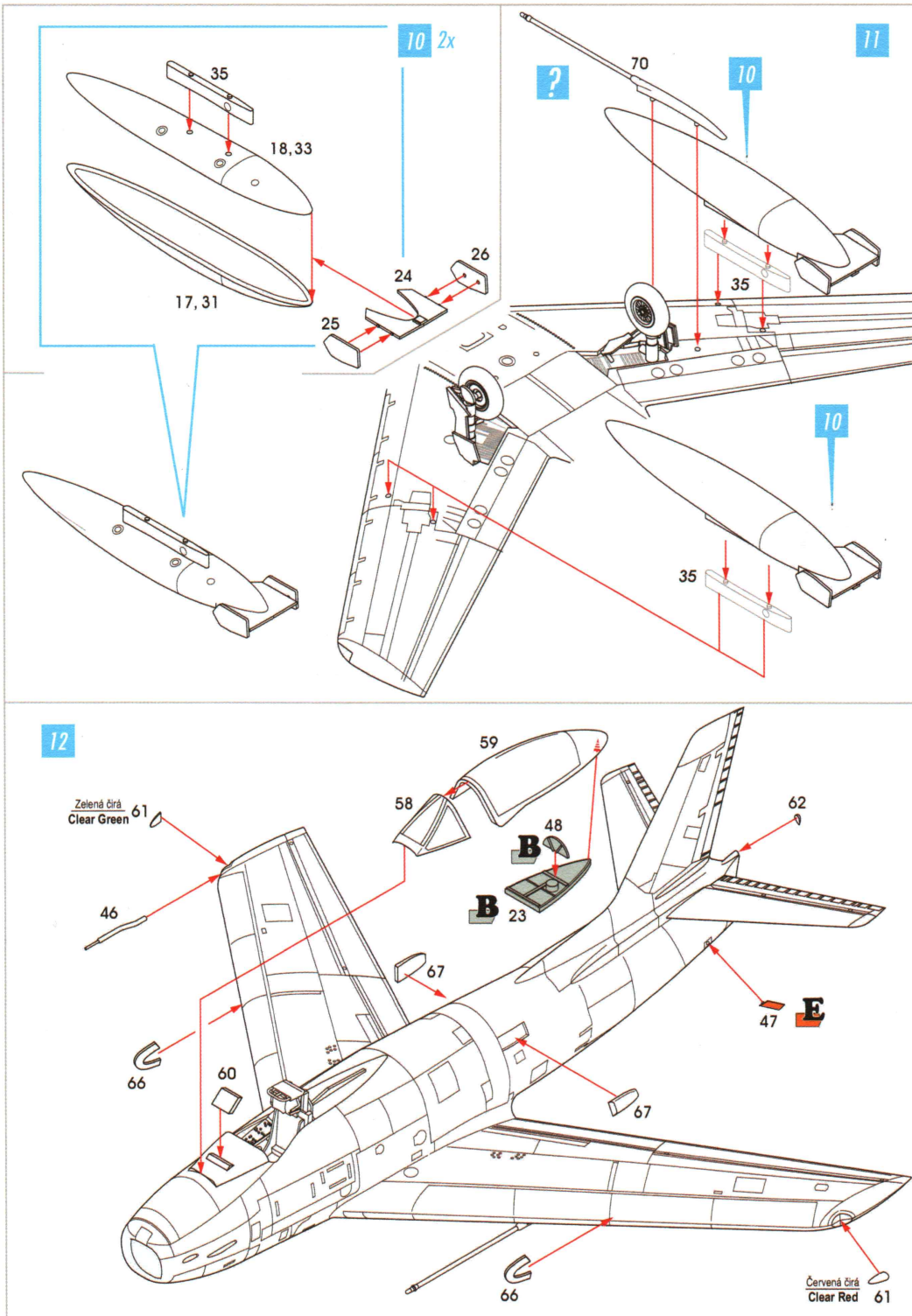
10 2x
35
18,33
17,31
26
24
25
?
70
10
11
35
10
35
12
59
58
Zelená čirá
Clear Green
61
46
48
B
B
23
62
67
47
E
66
60
67
66
Červená čirá
Clear Red
61

FJ-3M Fury Bu.No.139261, VF-173, CVG-4, U.S.S. Randolf CVA-15,1957

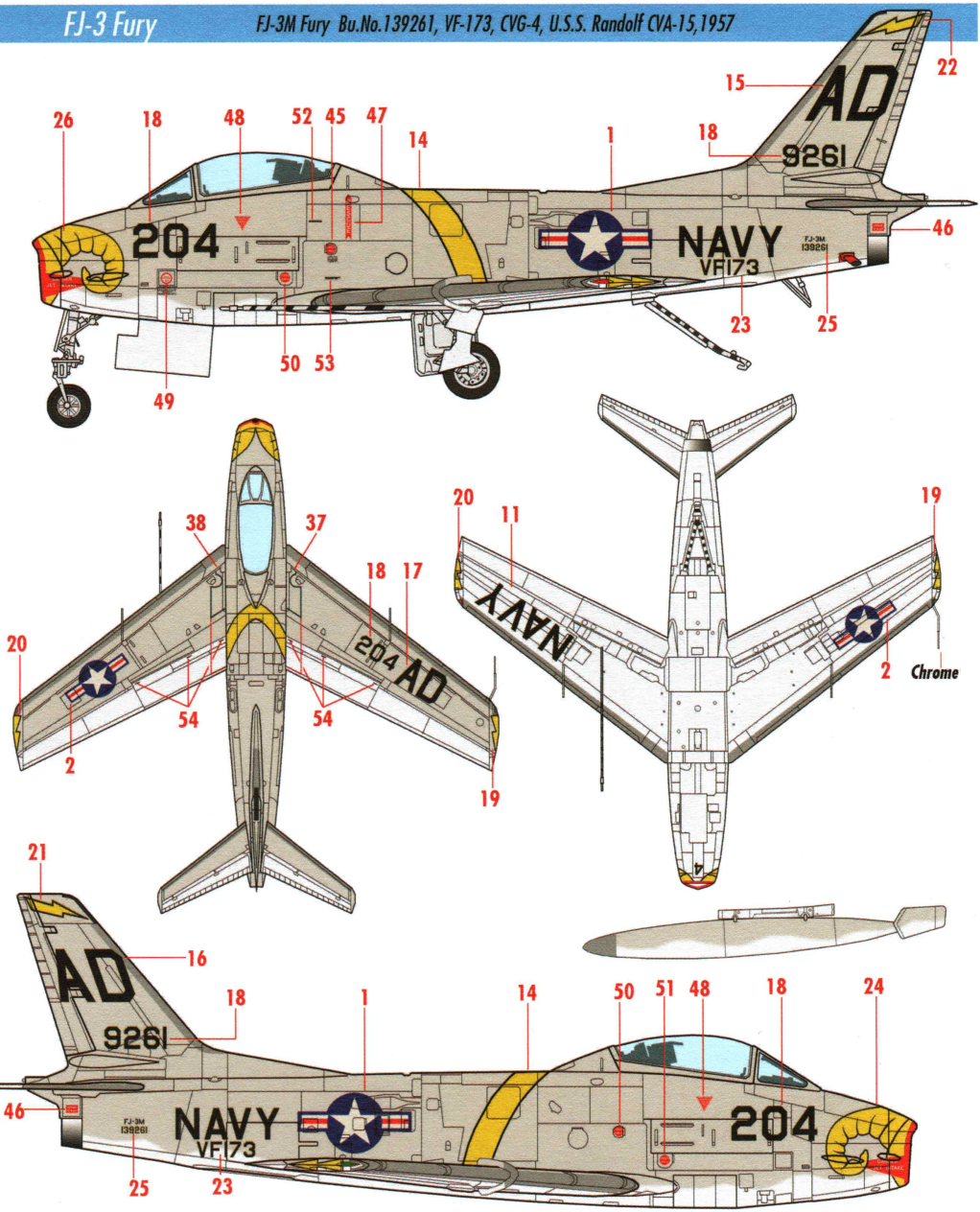

Silver	Natural metal	FS 17875 White	Black	Red	FS 16440 Light Gull Gray

FJ-3M Fury Bu.No. 139255, VF-142, LTJG E.L.Geronime, 1957

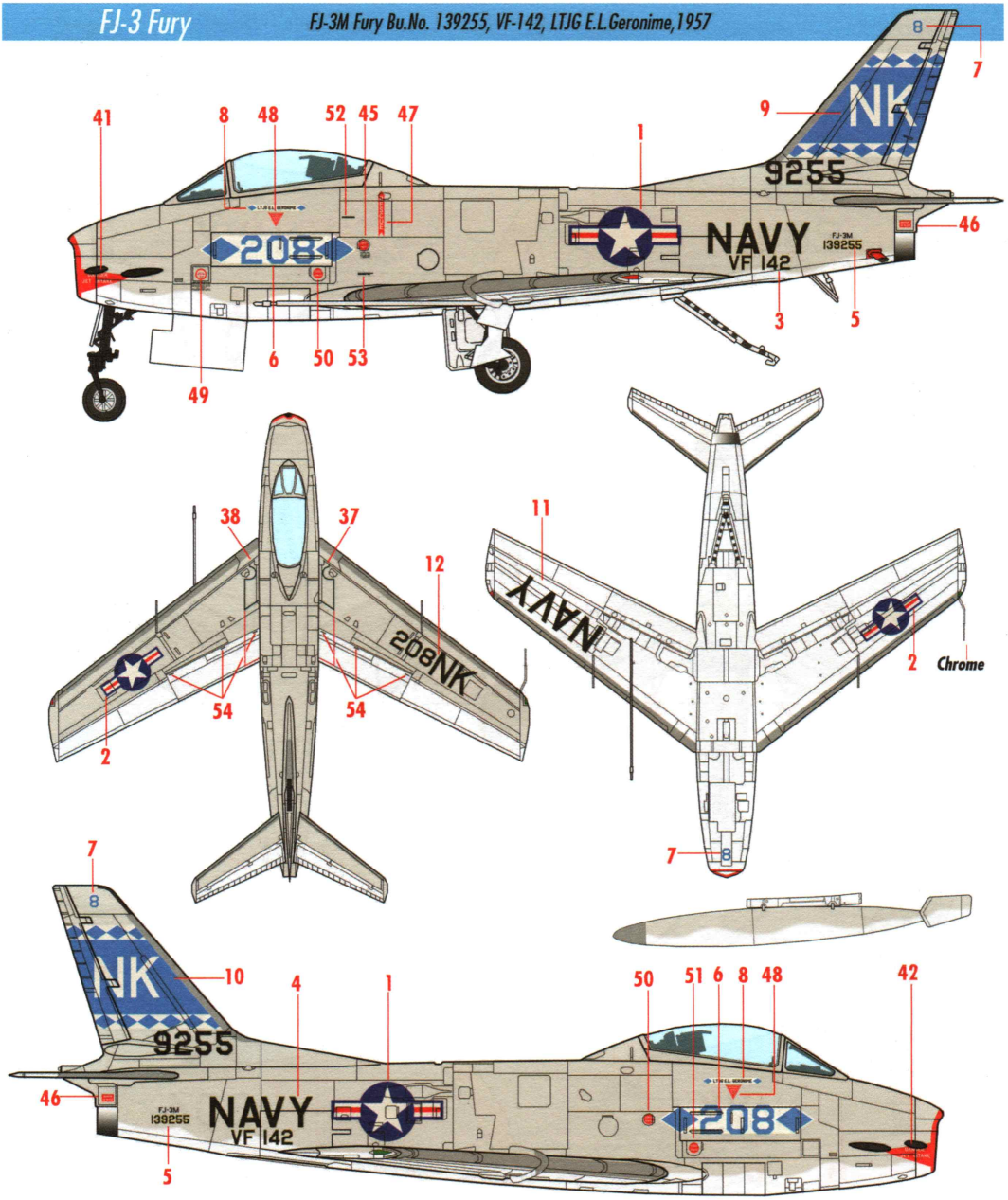

FS 17875	FS 16440			
Silver	Natural metal	White	Light Gull Gray	Red	Black

FJ-3 Fury Bu.No. 135867, VU-3, NAS Moffett Field 1958

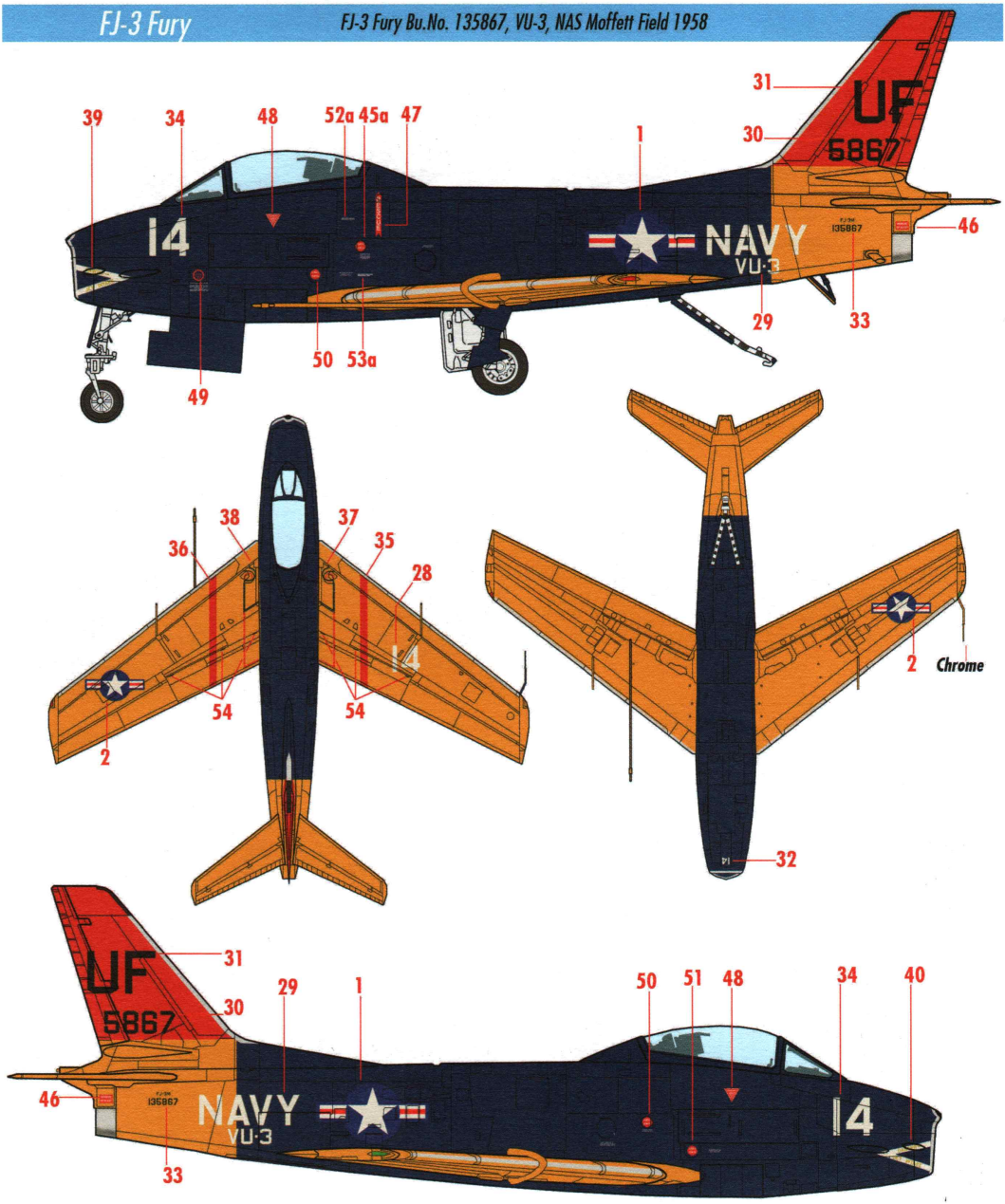

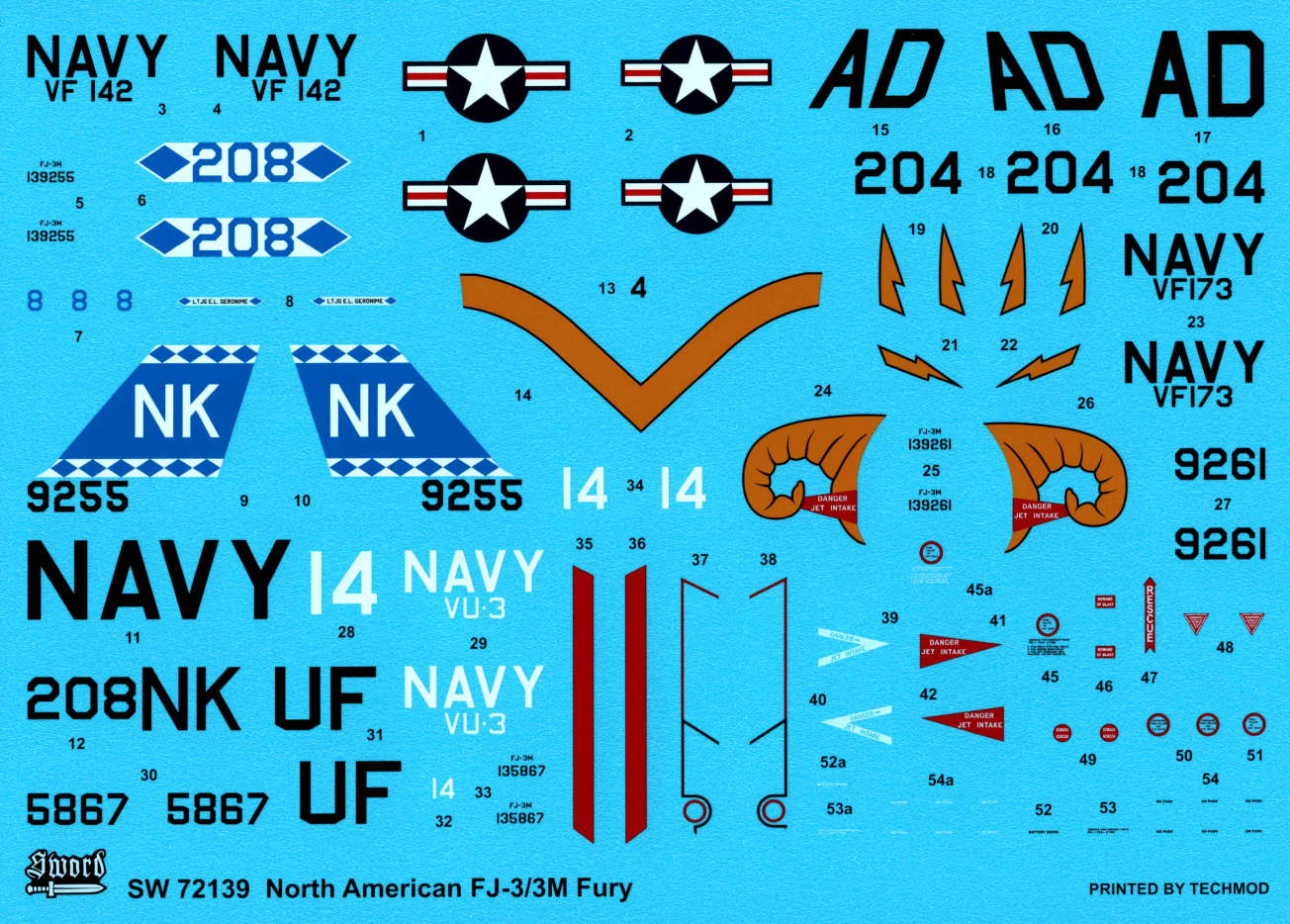

Sword

SW 72139 North American FJ-3/3M Fury

PRINTED BY TECHMOD